SYSTEM

60 YEARS OF
EXPERIENCE
**DESIGNING
THE FUTURE**

DESIGN • QUALITY • TRUST

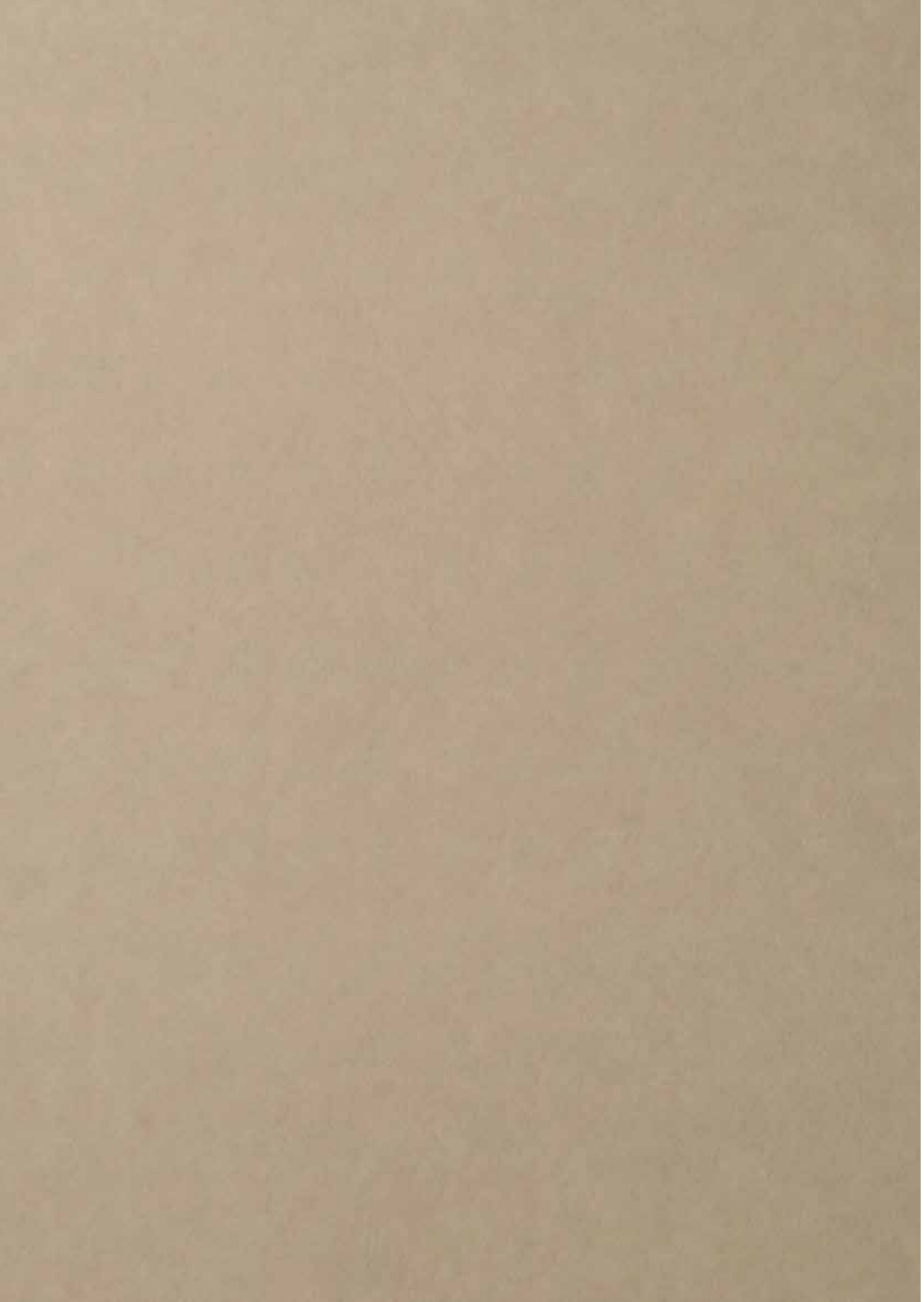

SYSTEM

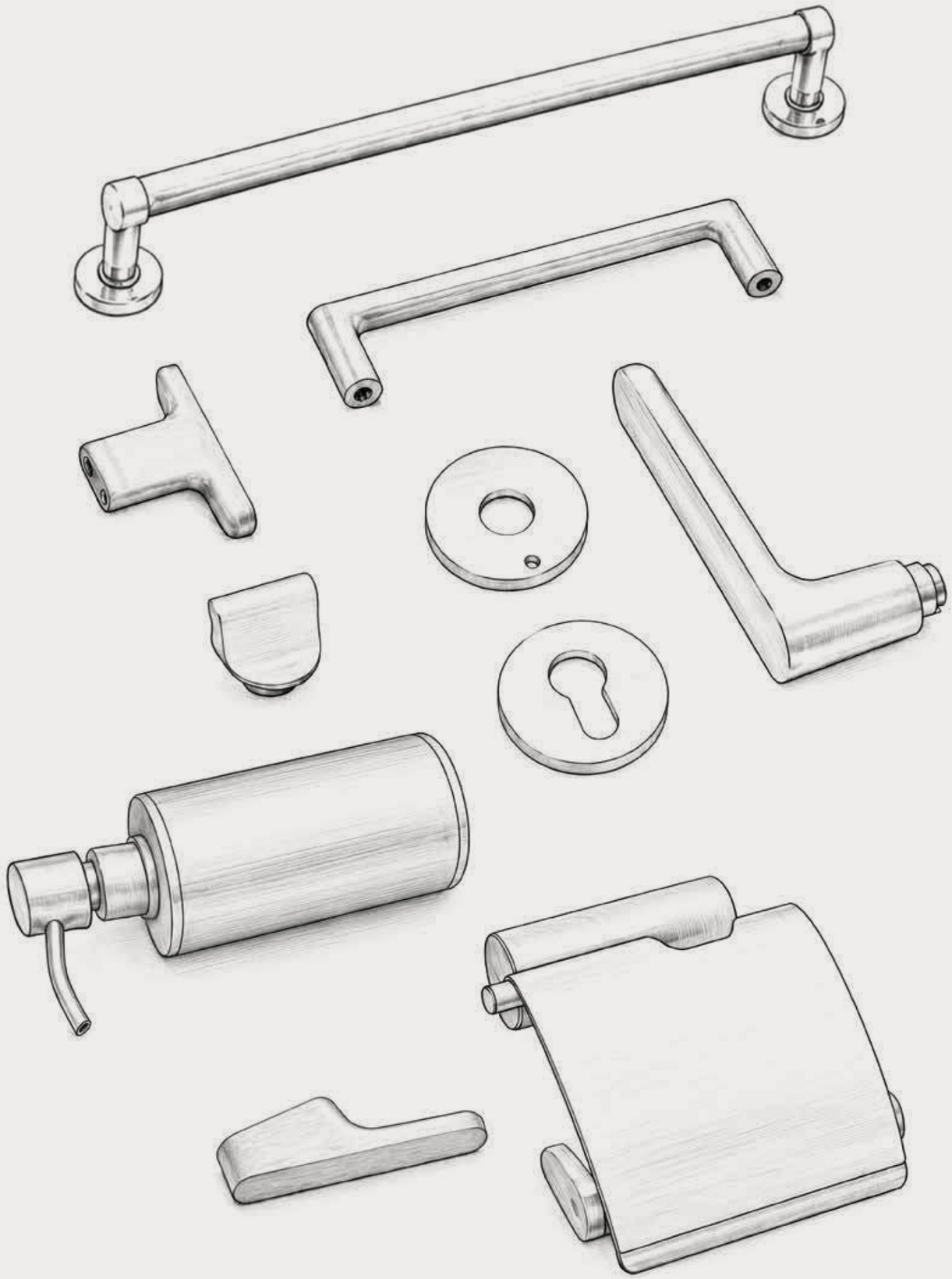

ROOTED EXPERIENCE
TIMELESS QUALITY

SYSTEM combines years of manufacturing expertise with a contemporary design approach to create solutions that add value to living spaces. Managing design, production, and quality processes in-house, our brand brings together aesthetics, durability, and user comfort under a unified vision. With every collection, we continue to transform our long-standing expertise into timeless and reliable products that respond to today's needs.

In this catalogue all the industrial designs of products are under legal protection of Turkish Patent Instute with the law of KHK 554 against making the copies. **SYSTEM FURNITURE ACCESSORIES INDUSTRIAL** is a trade mark belongs to **SYSTEM FURNITURE ACCESSORIES INC.**

www.systemhandle.com | **www.systembanyo.com**

THREE GENERATIONS OF **MANUFACTURING EXPERIENCE**

With **over 60 years** of manufacturing heritage, we continue to grow with the trust of a family-owned company and the innovative vision of future generations.

Furniture & Architectural Hardware
Comprehensive Expertise

With our extensive product portfolio ranging from furniture handles to door handles, we offer comprehensive solutions tailored to the expectations of different markets and design needs.

Furniture and architectural hardware accessories form the core of our expertise. Over the years, **SYSTEM Furniture Accessories** has established itself as a trusted manufacturer of furniture handles, knobs, and door handles across numerous international markets. Through continuous investment in design, engineering, and manufacturing, we now offer one of the most comprehensive product portfolios in the industry. Our collection includes **more than 2,000 furniture handle models and over 250 door handle designs**.













For us, an accessory is more than just a functional component; it is the finishing touch that completes the character of furniture and living spaces. With this approach, we develop products that bring together aesthetics, durability, and ease of use. Through a wide range of styles, sizes, and finishes, we offer our partners distinctive, timeless, and long-lasting solutions.



DESIGN, MANUFACTURING **QUALITY CONTROL**

By managing our design and manufacturing processes in-house, we maintain control over quality at every stage. All our products are designed and manufactured at our facilities in Istanbul. Our integrated production structure enables us to develop flexible and innovative solutions while maintaining consistent quality.









FUNCTION AND AESTHETICS IN **PERFECT BALANCE**



We carry forward more than 60 years of experience, combining the trust of a family-owned company with the innovative perspective of future generations.

SYSTEM Furniture Accessories continues to evolve with every generation by bringing its long-standing expertise together with changing lifestyles and contemporary design approaches.

Our design approach, where functionality meets aesthetics, is reflected in distinctive and timeless products that add value to modern living spaces. By combining our long-standing expertise with a contemporary design perspective, we deliver refined and durable solutions in every detail.

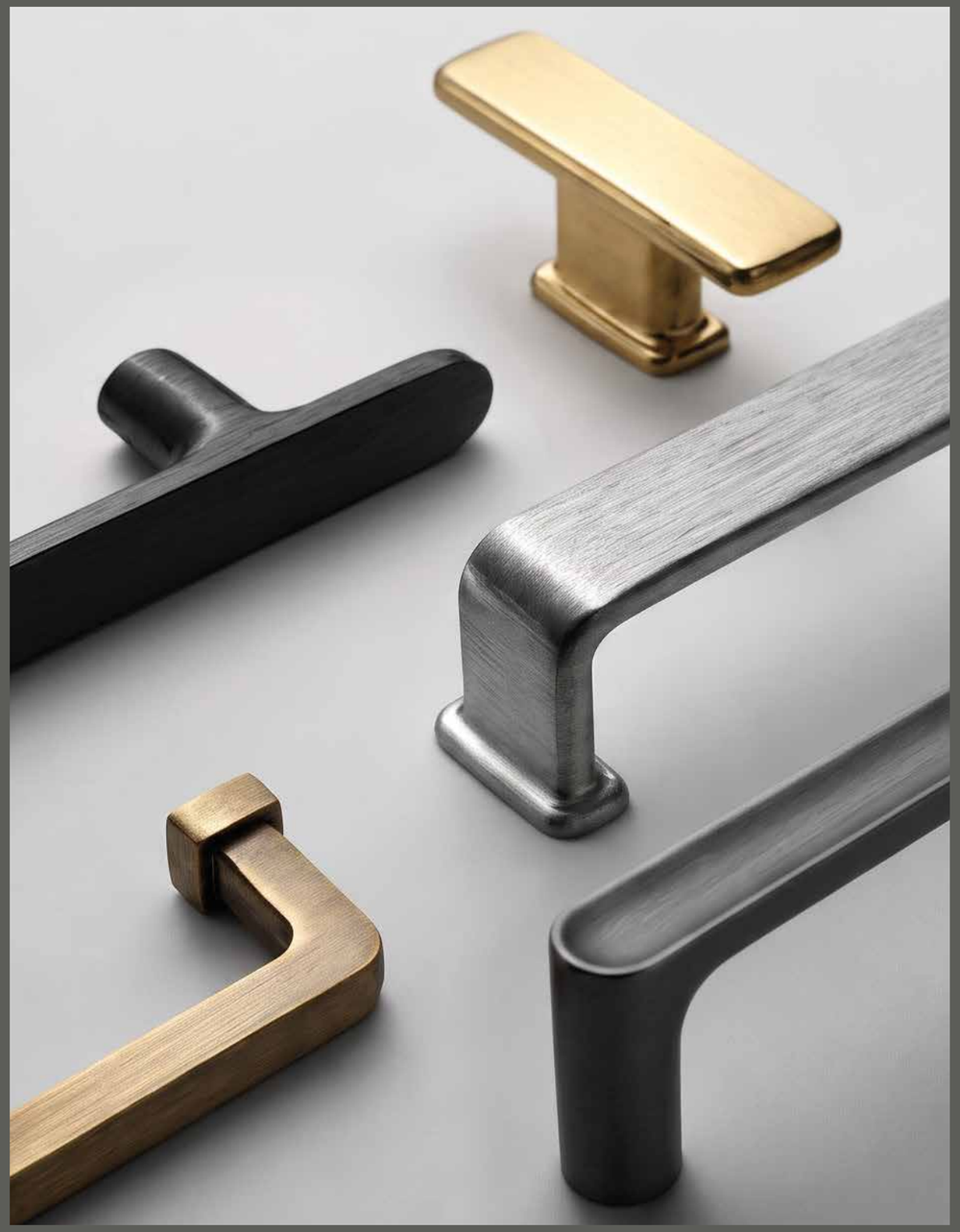



YEARS OF EXPERIENCE, **TODAY'S QUALITY**

We combine our long-standing craftsmanship expertise with modern engineering and advanced manufacturing technologies. In every product, we carry our attention to detail forward through durability and high quality standards.



Our manufacturing approach is built on attention to detail, careful material selection, and strong technical expertise. With our aesthetic perspective, we develop distinctive and long-lasting furniture and architectural hardware accessories that add value to living spaces.



Different Forms
One Design Language

Developed in a wide range of forms, sizes, and finishes, **SYSTEM** collections bring together aesthetics, functionality, and harmony in furniture and architectural hardware.



SHAPED
BY EXPERIENCE
DEFINED
BY QUALITY



MIX & MATCH FREELY

EXPRESS YOURSELF

Harmonique collections allow you to freely combine different forms, textures, and finishes. By matching different products to suit your personal style, you can give each space a distinctive character and create a cohesive, individual design language throughout your living spaces. Every choice reinterprets the character of the space.







The collection combines the warm character of leather with the refined presence of metal, bringing a distinctive and sophisticated touch to living spaces. Through different combinations of finishes and colors, every detail gains its own unique character.













Completing Furniture with **Functional Details**

SYSTEM Furniture Accessories brings functionality together with a simple and modern design approach through a wide product range extending from furniture legs to hooks. Every detail is designed to add both aesthetic and practical value to living spaces.



CRAFTSMANSHIP HIDDEN IN THE DETAILS







Every product undergoes a meticulous manufacturing process, from material selection to final inspection. With our experienced production team and quality-focused approach, we deliver long-lasting solutions that combine durability with everyday comfort.

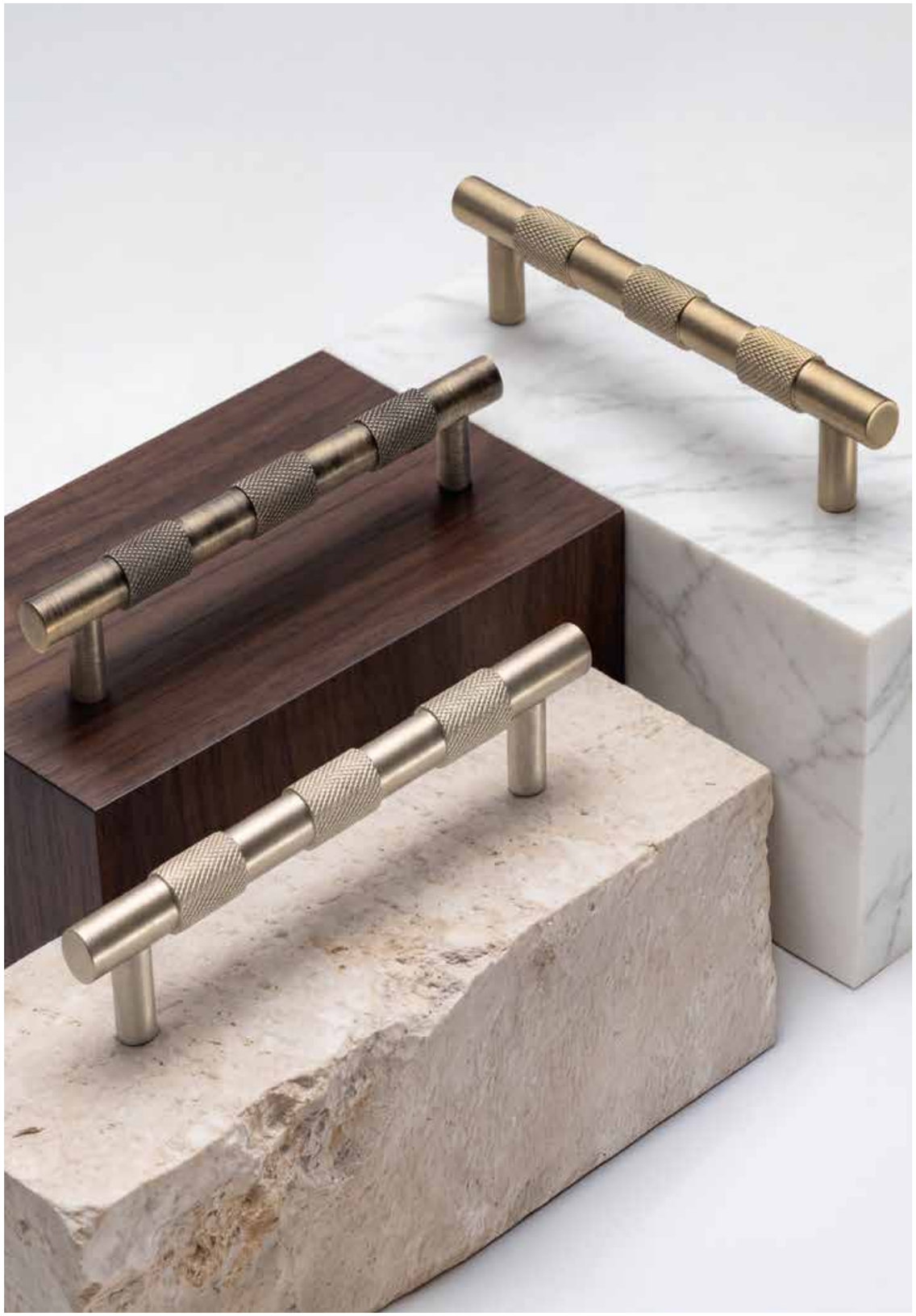

Thoughtfully Designed
A Timeless Character

Our attention to detail gives every product a timeless character. Because true quality reveals itself in the smallest details.



For Living Spaces
Details That Add Value

We offer a wide range of door and furniture accessories designed to meet different needs, bringing aesthetics and functionality together through diverse design approaches.

Each product completes living spaces as a functional and distinctive detail that supports design harmony, combining ease of use with lasting aesthetic value.





We bring function and aesthetics together through a balanced design approach, believing that details define the character of a space. With distinctive forms, carefully selected finishes, and strong technical solutions, we develop products that add value to design.

Every element, from the overall form of the product to its smallest detail, is shaped by the same design philosophy. Our door handles bring together visual harmony, user comfort, and refined detailing to give spaces a sophisticated character. Developed in a variety of forms, finishes, and materials, the designs complement both modern and timeless interiors with a cohesive aesthetic.



A RISING BRAND
IN THE BATHROOM WORLD

Building on our long-standing expertise in metal manufacturing, we have expanded into bathroom accessories with a strong collection that brings together aesthetics, functionality, and durability.

Shaped by our experience in product development, surface technologies, and design, **SYSTEM Bathroom** offers distinctive solutions that adapt to different living spaces and user needs. Gaining recognition across various markets in a short period of time, our collection continues to evolve by closely following changing user expectations and design trends.

With an approach centered on quality, refined details, and design integrity, we continue to strengthen our position in the bathroom accessories market.





We bring functional details that adapt to different user needs together with a clean and cohesive design language, carrying aesthetics, ease of use, and harmony into every detail of the bathroom.

For Every Area of the Bathroom
Holistic Solutions

With our wide range of products, we offer comprehensive solutions for different user needs and develop functional products that adapt seamlessly to every area of the bathroom.

Shaped by a cohesive design language, our products bring together aesthetics, ease of use and visual harmony to create a balanced and modern bathroom environment.







The Warmth of Texture
The Elegance of Detail

Our collections combine leather and leather-wrapped details with metal finishes, bringing a warm and refined character to bathroom spaces.

Designed through the interplay of different colors and finishes, each product complements functionality with a distinctive material expression.





SYSTEM Bathroom brings together complementary products for different user needs with an aesthetic and functional approach. It offers solutions that support organization, ease of use, and design consistency throughout the bathroom.





THE DESIGN WORLD OF **SYSTEM**

In door, furniture, and bathroom accessories, we bring together aesthetics, functionality, and quality.

Discover our world of products,
and experience our timeless design philosophy.

THE DETAILS BEHIND OUR **STRENGTH**

While supplying more than **50,000** products per day to our business partners in the kitchen and bathroom sectors, we ensure fast and well-organized operations through our warehouse system supported by advanced technologies. As a third-generation family business, we draw our strength in the industry from the long-standing, trust-based relationships we have built with our customers over the years.

All information regarding our products and designs is available through our catalogues at **www.systemhandle.com**. In line with our commitment to quality and sustainability in production, the processes applied to our products are evaluated and approved by independent organizations. The relevant certificates are available on our website. All our products undergo comprehensive quality control and testing processes at our manufacturing facilities in Istanbul.

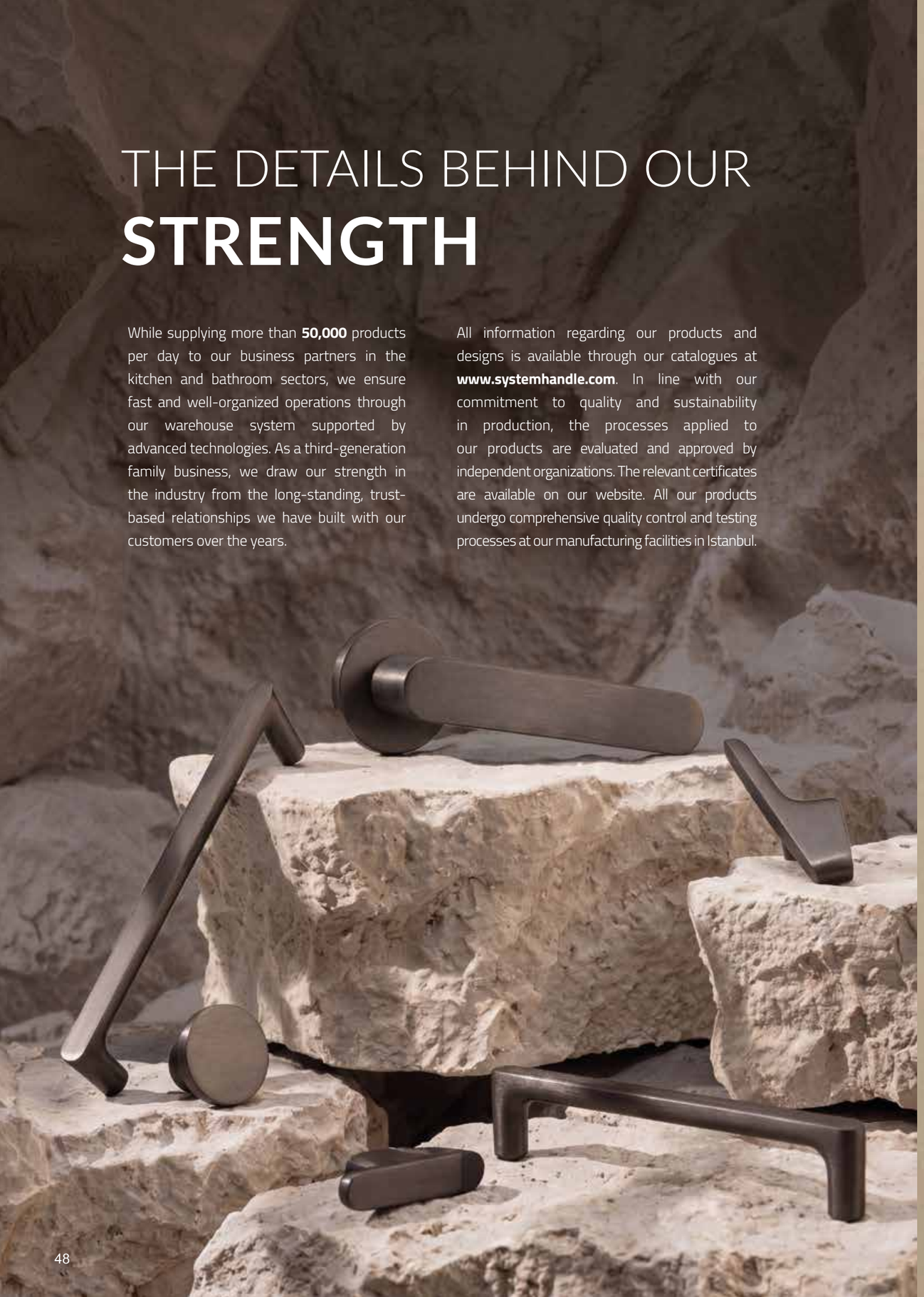

SYSTEM

SYSTEM FURNITURE ACCESSORIES INC.
Osmangazi District, Sevil Street No: 4, 34887 Sancaktepe, Istanbul / TÜRKİYE
Tel: +90 216 466 33 40 I **Fax:** +90 216 420 27 28
E-Mail: export@systemhandle.com

www.systemhandle.com I **www.systembanyo.com**

FSC